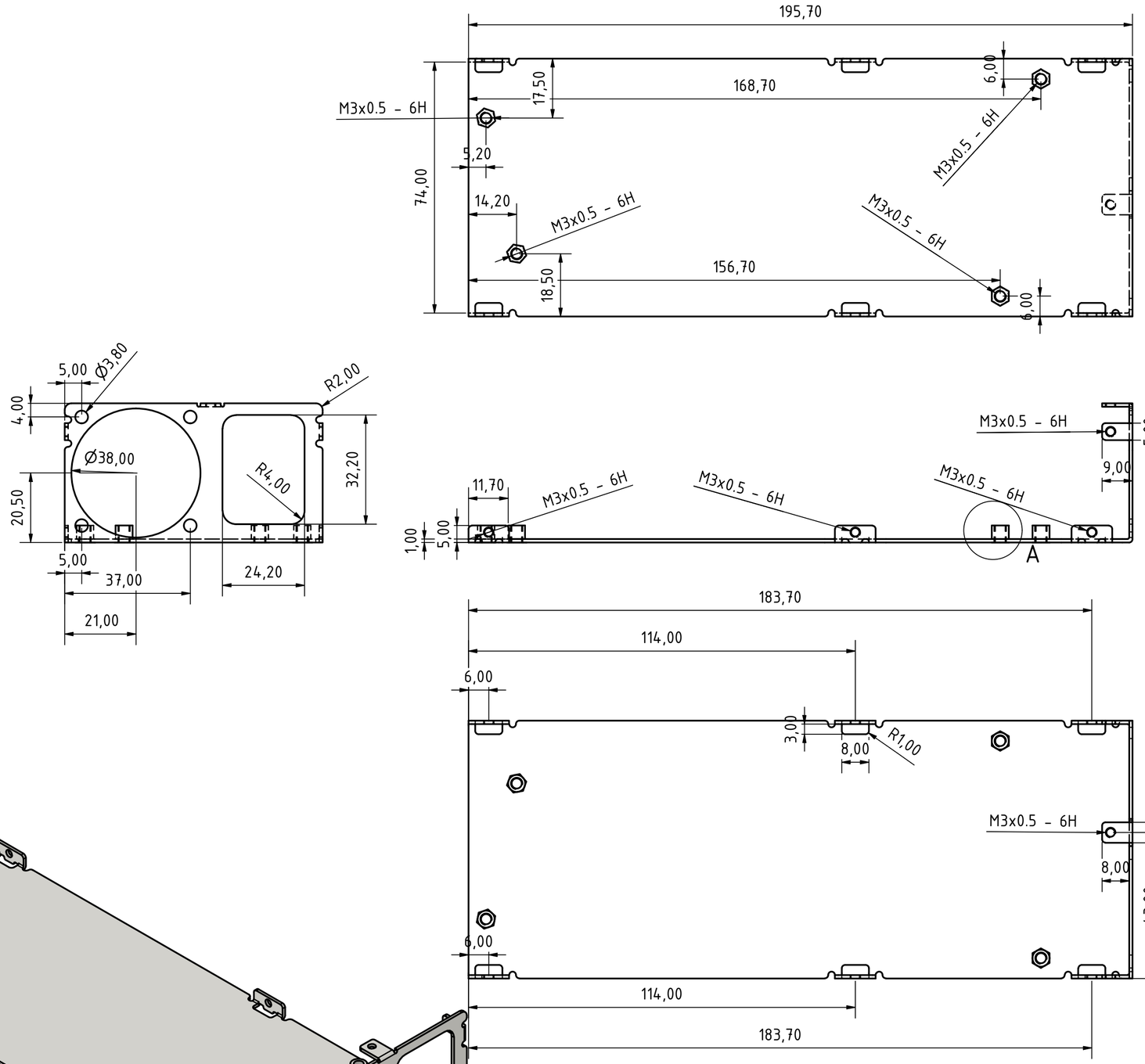

A (2 : 1)

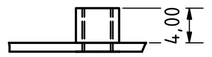

All standoffs need to be elevated 4 mm above the surface.
Reference product: pressfit/rivet standoff
PEM® SO BN 20521 300122063 SO-M3-5ZI

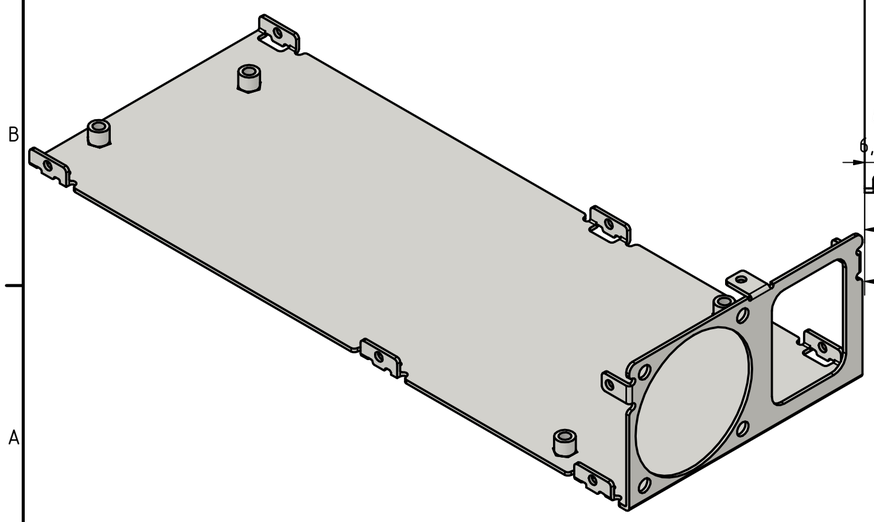

					Date	Name
				Drawn	31.01.2024	wernegger
				Checked		
				Standard		
State	Changes	Date	Name	MP100003072		1 A2